INSTRUCTION SHEET

BER0065 – TELESCOPIC CHUTE

APPLICATION: Snowblowers SA92 and up.

INSTALLATION

IMPORTANT: A MINIMUM CLEARANCE OF 12'-6" IS REQUIRED TO INSTALL THE TELESCOPIC CHUTE.

Preparing the Telescopic Chute

1. **Figure 1:** Remove all the bolts holding the flanges installed temporarily on the three part chute for shipping and retain for future use.
2. **Figure 1:** Remove from the telescopic chute the 5/8"NC x 2" bolts, 5/8" lockwashers and 5/8"NC nylon insert nuts (items 3-4-5). Attach the three part chute (item 2) to the telescopic base (item 1) with the same hardware removed previously (items 3-4-5). Tighten at 165 lbs-ft (224 N-M).
3. **Figure 2:** Remove the bolt (item 2A) from the hose clamp on the telescopic base to pull up the hoses (item1).
4. **Figure 2:** Remove the hose clamp bolt (item 2B) on the three part chute and place the hoses (item 1) under the clamp. Secure with the bolt (item 2B) and the nylon insert nut by tightening loosely.
5. **Figure 2:** Using thread sealant, attach the hoses to the two 90° elbows (items 4) on the cylinder.
6. Tighten the two bolts (items 2A-2B) leaving the hose surplus at the base of the telescopic section as illustrated for when the chute is extended.

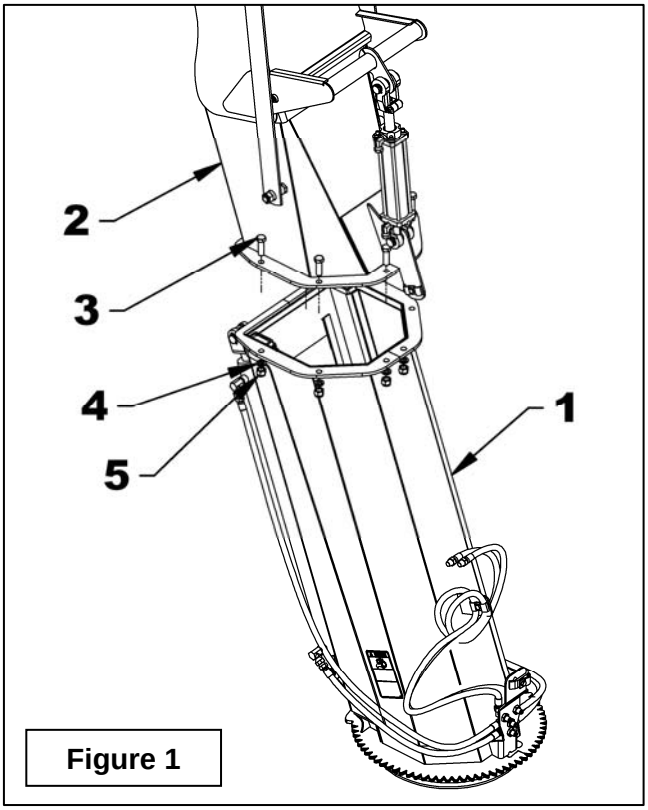

Figure 1

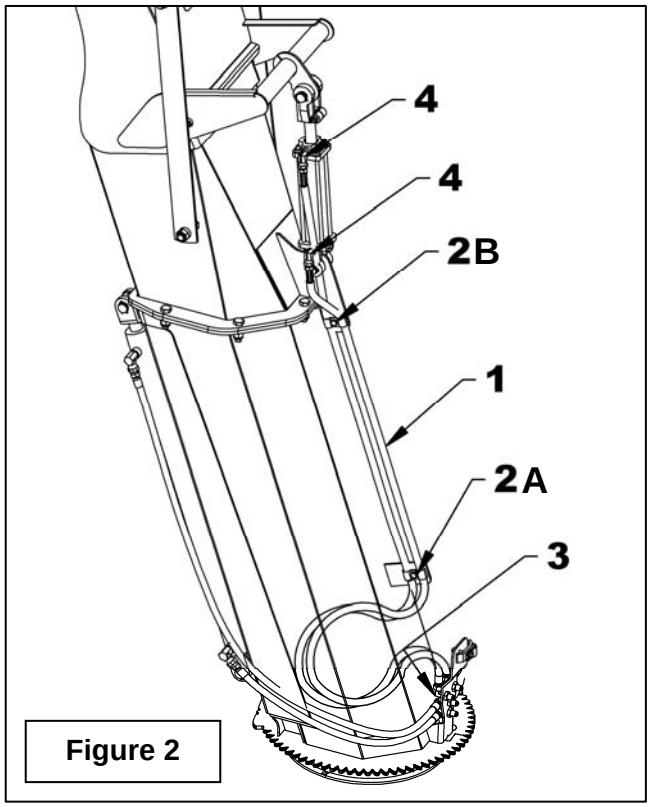

Figure 2

Removing the Existing Chute

1. **Figure 3:** Remove the two bolts and nuts (items 1-2) from the retaining plate (item 7) and the two bolts and nuts (items 8-9) holding the two retaining plates together.
2. **Figure 3:** Remove the gear protector (item 3) by taking off the four bolts and the four nuts (items 4-5).
3. **Figure 4:** Take off the motor gear (item 1) by removing the bolt, lockwasher and flat washer (items 1-2-3) then remove the four bolts, lockwashers and flat washers (items 5-6-7) to remove the motor (item 8).
4. **Figure 5:** Remove the anchor plate (item 1) and the anchoring flat bar (item 2).
5. **Figure 3:** Remove the chute and the rotation bushing (item 6) by sliding it back.

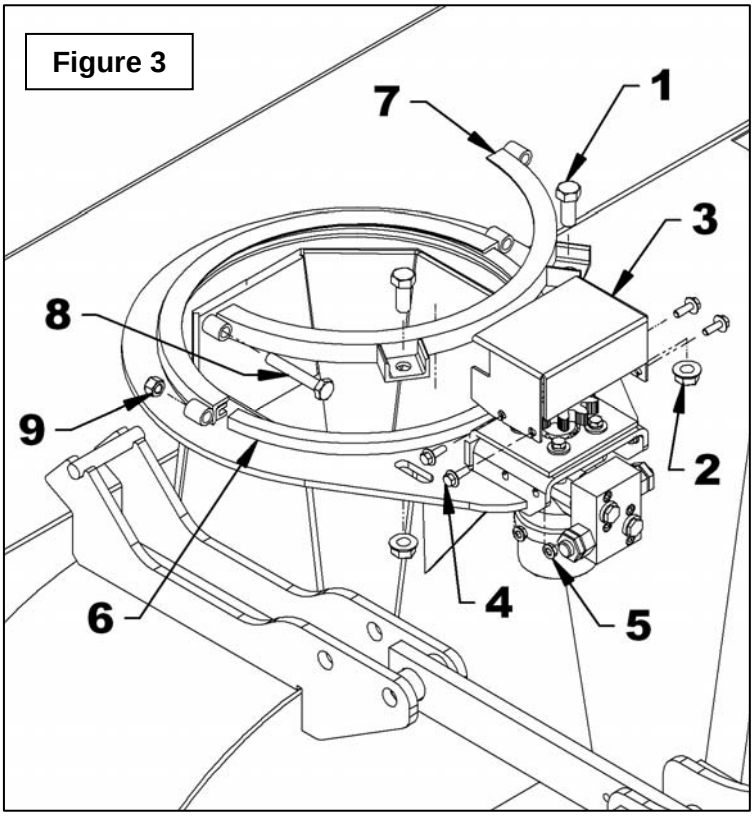

Figure 3

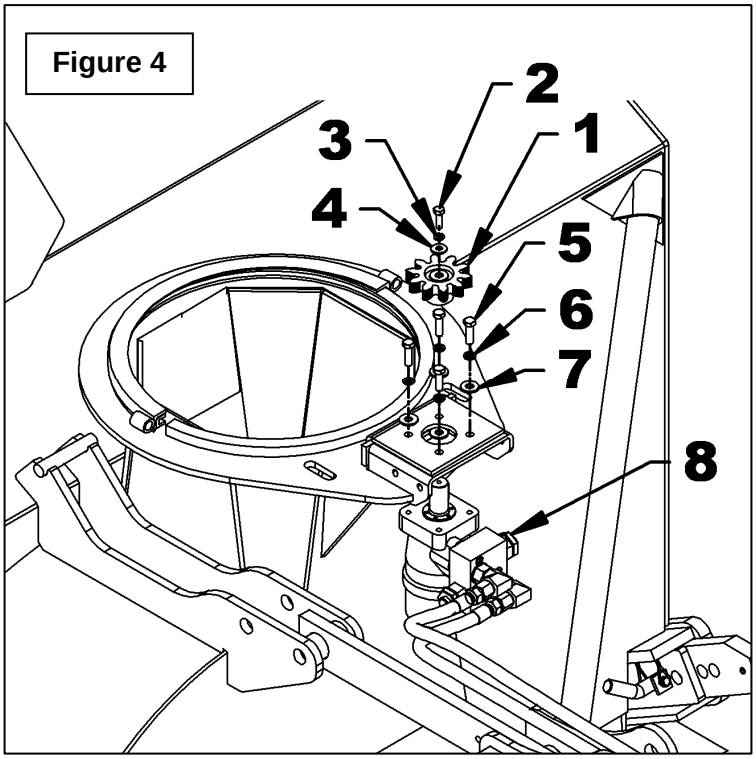

Figure 4

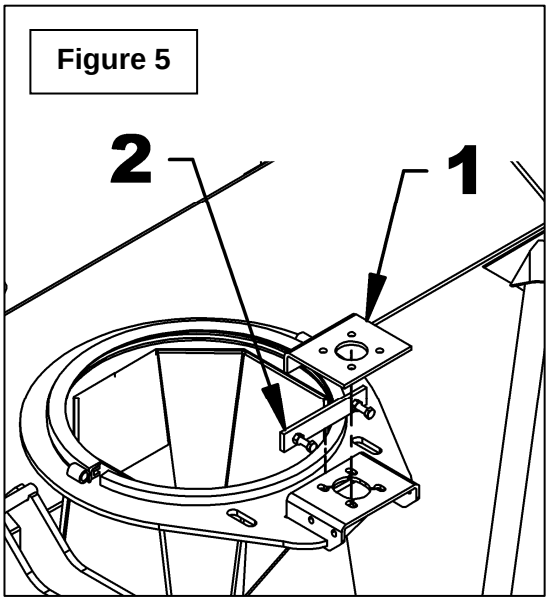

Figure 5

Preparing the Snowblower

1. After having removed the existing chute, temporarily install the retaining plate (fig.3, item 7) in order to create the most perfect circle possible.
2. **Figure 6-6A:** Place the new flanges on top of the retaining plates as illustrated and maintain in place with C-clamp pliers.
3. **Figure 6A:** Trace lines on each side of the blocks (A) and on the outside face (B) of the blocks.
4. **Figure 6:** Remove the flanges and make marks in the center of the two side lines and at 23/32" from the outside line of each block.
5. Drill ten 9/16" holes through the snowblower head where the marks are.

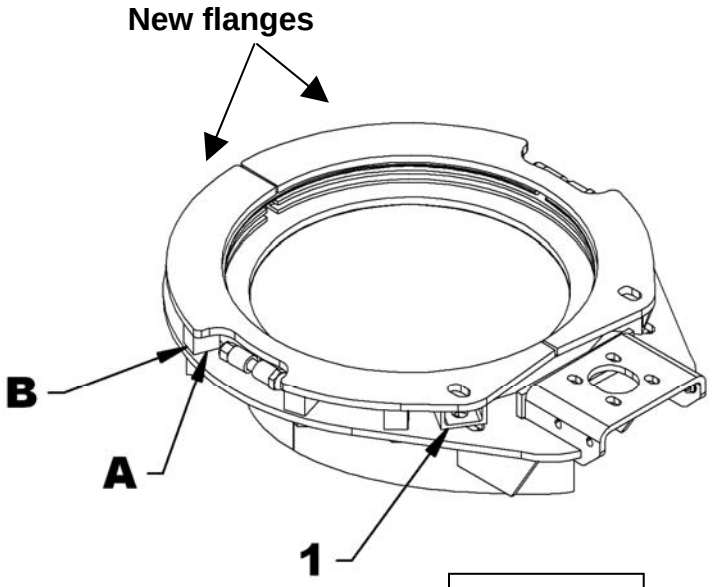

Figure 6A

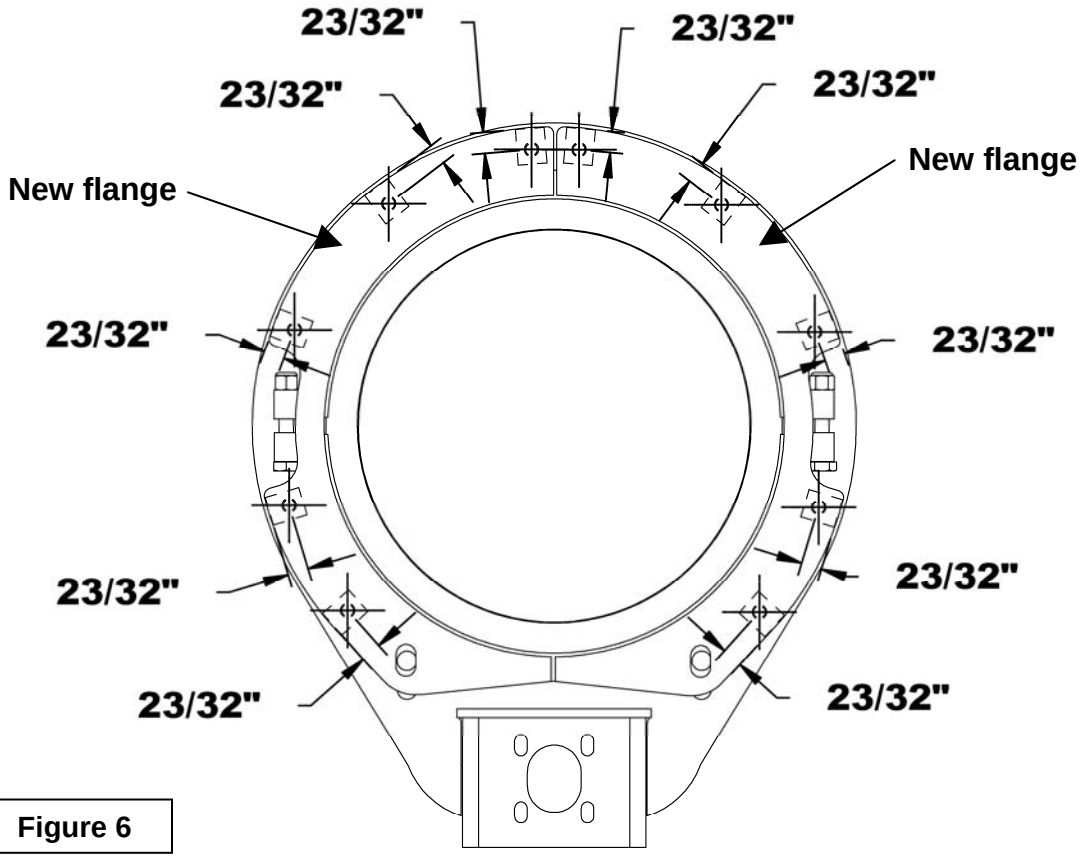

Figure 6

Installation of the Telescopic Chute

1. **Figure 7:** Insert the chute (item 1) under the retaining plate (item 2) welded on the snowblower.
2. **Figure 7:** Raise the chute slightly, about 1/4" and wind the rotation bushing (item 3) between the welded retaining plate and the chute ring (item 4) by inserting it as illustrated. Fold back the rotation bushing around the chute.
3. **Figure 8:** Install the retaining plate (item 1) on the snowblower by inserting each end of the bushing inside the retaining plate. Align the vertical holes of the retaining plate with the oblong holes (fig. 7) and fix with the two 5/8" x 1 1/2" bolts (item 2) and 5/8" serrated flange nuts. Do not tighten.
4. **Figure 8:** Insert the two 1/2" x 3 1/4" bolts (item 3) to join together the two retaining plates. Hit slightly the two bolt heads with a hammer alternating between the 2 to bring the two retaining plates closer together. If the retaining plate moves back after hitting it, screw in the 5/8" x 1 1/2" bolts (item 2) slightly. When the bolt ends (item 3) exceed the holes enough, secure with two 1/2" nylon insert lock nut until the two retaining plates are approximately 1/4" apart.
5. **Figure 8:** Tighten the 1/2" x 3 1/4" bolts (item 3) to reduce the gap between the retaining plates until chute turns with a slight resistance and tighten the two 5/8" x 1 1/2" bolts(item 2) slightly.

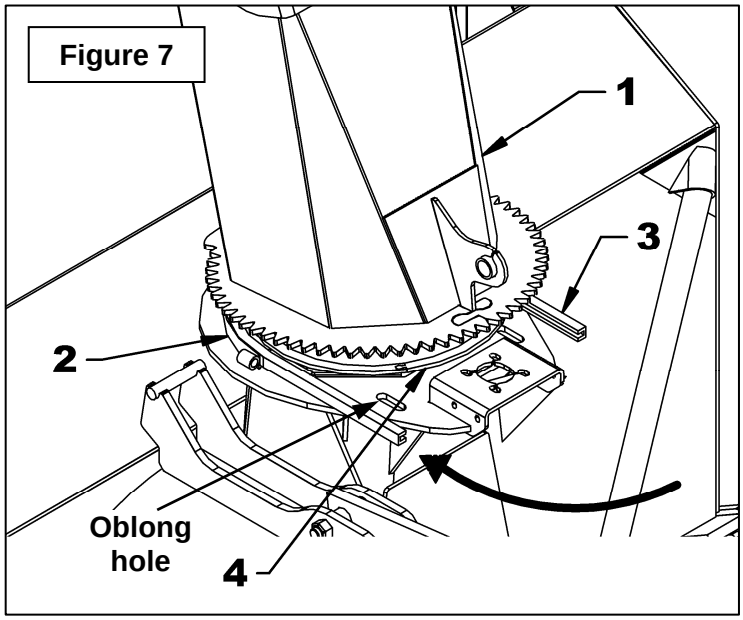

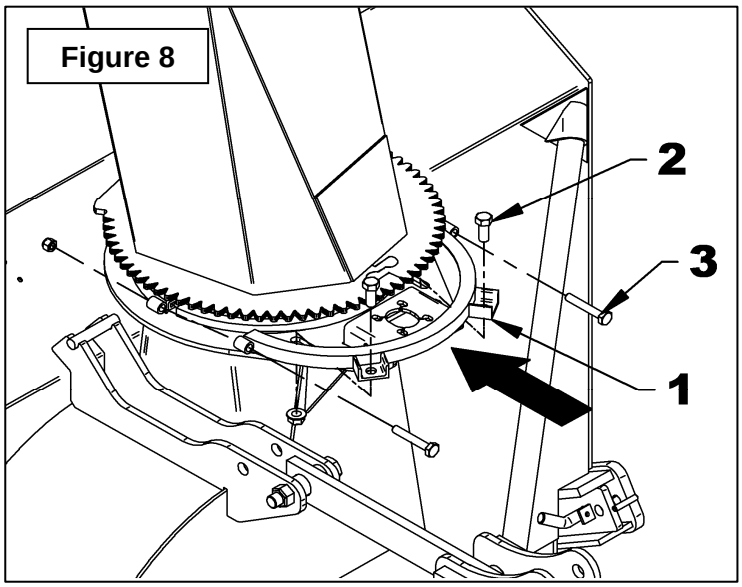

6. **Figure 9**: Insert the anchoring flat bar (item 1) between the anchor plate (item 3) and the motor support (item 2) as shown. Screw the 3/8" nuts (item 4) up to the head of the two 3/8" NC x 1 1/2" bolts (item 5) and screw the bolts in the anchoring flat bar (item 1).
7. **Figure 9**: Attach the motor (item 6) to the motor support (item 3) with four 3/8" NC x 1 1/4" bolts, four 1/4" lockwashers and four 1/4" flat washers (items 7-8-9).
8. **Figure 9**: Install the gear (item 10) on the motor (item 6) making sure the key is inserted in the shaft and secure with the M8 x 1.25 x 25 mm bolt, a 5/16" lockwasher and a 5/16" flat washer (items 11-12-13).

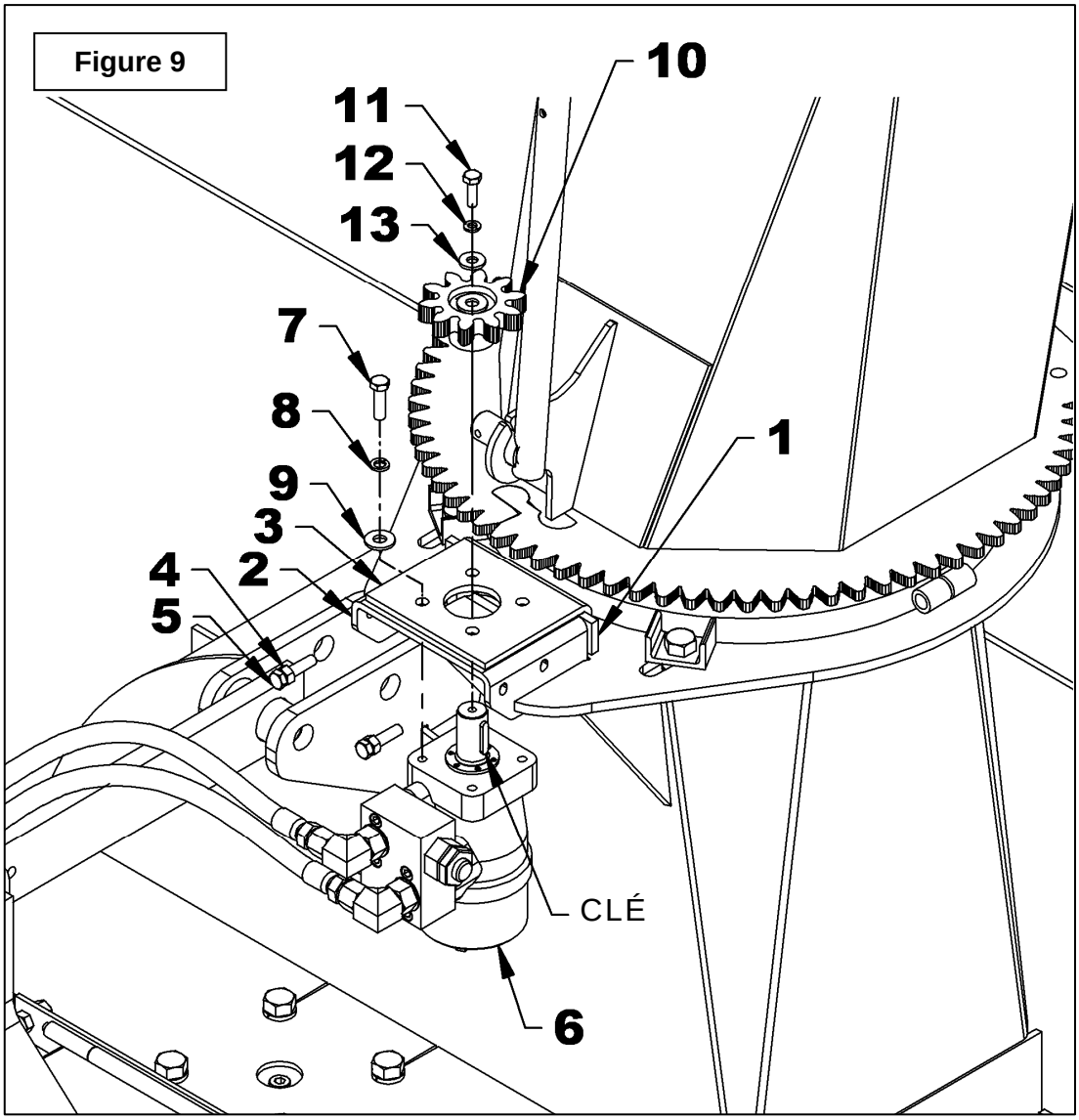

9. **Figure 10**: Adjust the distance between the chute gear and the motor gear according to the following step:
   - **A.** Slightly unscrew the two bolts (item 2) that hold the retaining plate.
   - **B.** Screw the two nuts (item 3) simultaneously until the distance between the retaining plates and the chute base is leveled.
   - **C.** Tighten the bolts (item 2) according to the ***"Torque Specification Table"*** located at the end of the snowblower manual.
   - **D.** Adjust the gears to a distance between 1/32" and 1/16" by screwing the two bolts (item 4). Lock in the adjustment with the nuts (item 5) moving them against the anchoring flat bar (item 6). Tighten the four bolts (item 1) according to the ***"Torque Specification Table"***.
   - **E.** Run a test at low speed. If the gears have an irregular sound while testing, it means the adjustment is incorrect. Bring parts closer to each other until the sound becomes regular and even.

10. **Figure 10:** Install the gear cover (item 7) with four 5/16" x 1" bolts (item 8) on the outside and 5/16" serrated flange nuts (item 9) on the inside Tighten according to the ***"Torque Specification Table"***

Figure 10

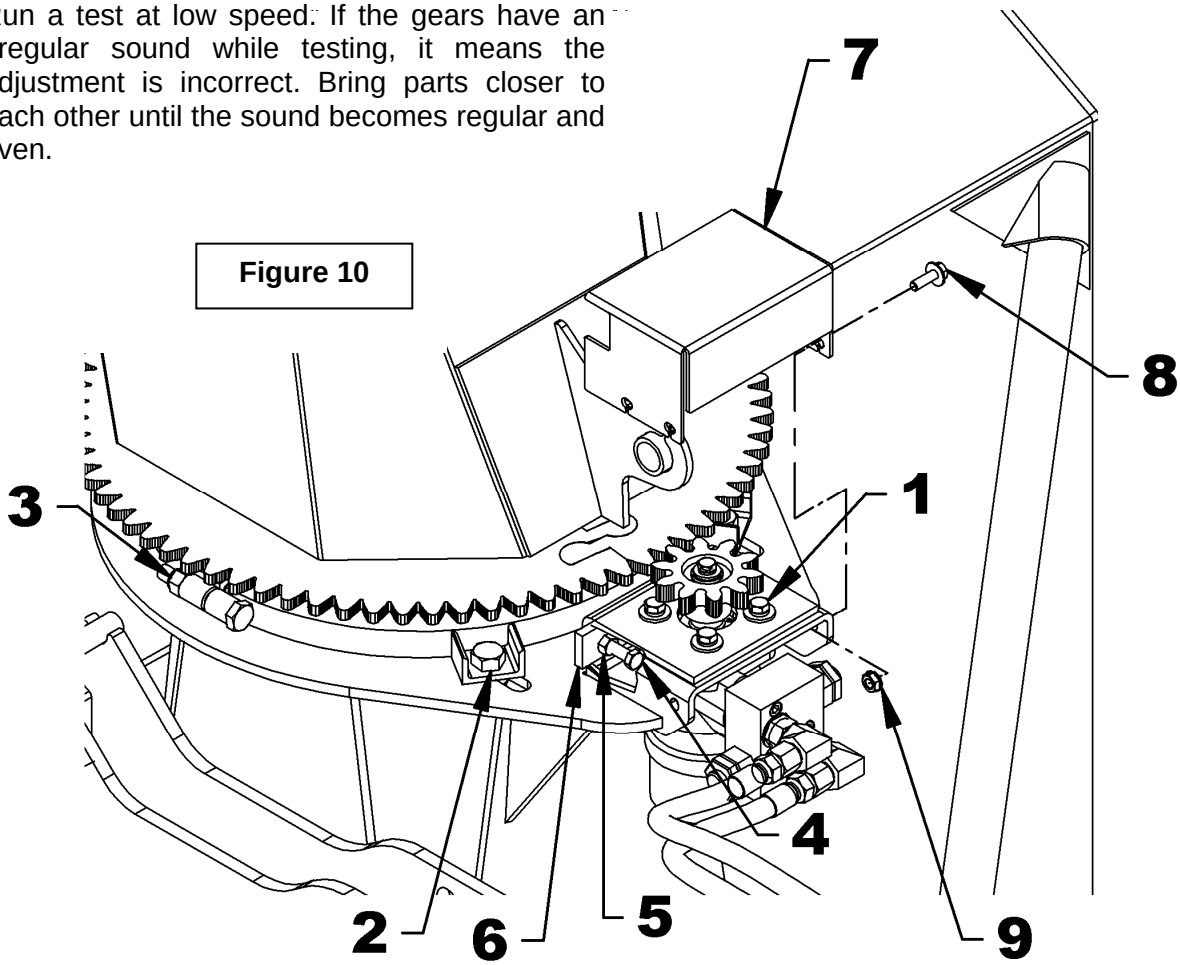

Installation of the Flanges

Install one flange at a time on each side.

1. **Figure 10:** Remove the bolt (item 2) and the serrated flange nut. Keep the nut and discard the bolt.
2. **Figure 11:** Insert the flange (item 1) on top of the retaining plate, under the chute gear.
3. **Figure 11:** Fasten the flange in the holes previously drilled with five 1/2"NC x 1 1/2" bolts, 1/2" lockwashers and 1/2" (9/16" hole) flat washers (items 3-4-5). Tighten at 88 lbs-ft (119 N-M).
4. **Figure 12:** Attach the retaining plate with a 5/8"NC x 2 3/4" (item 1) and the 5/8" serrated flange nut previously removed.
5. **Figure 11:** Repeat the same procedure on the other side with the second flange (item 2).

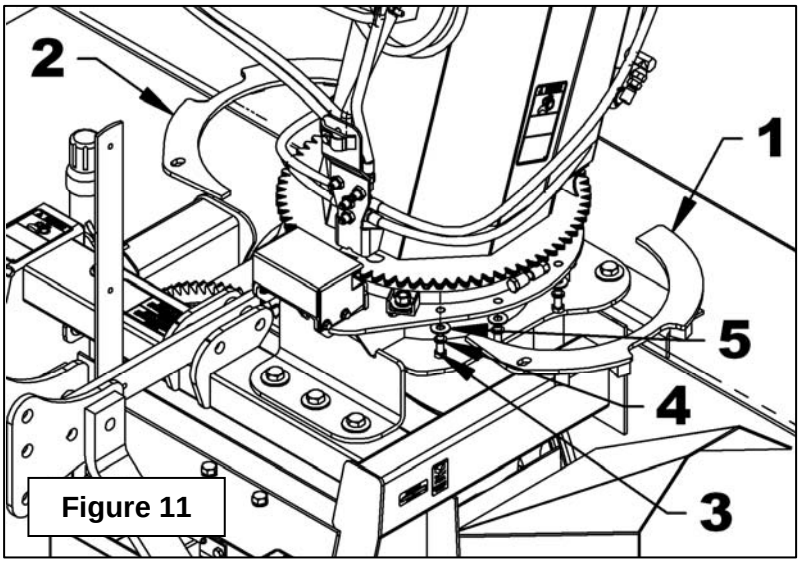

Figure 11

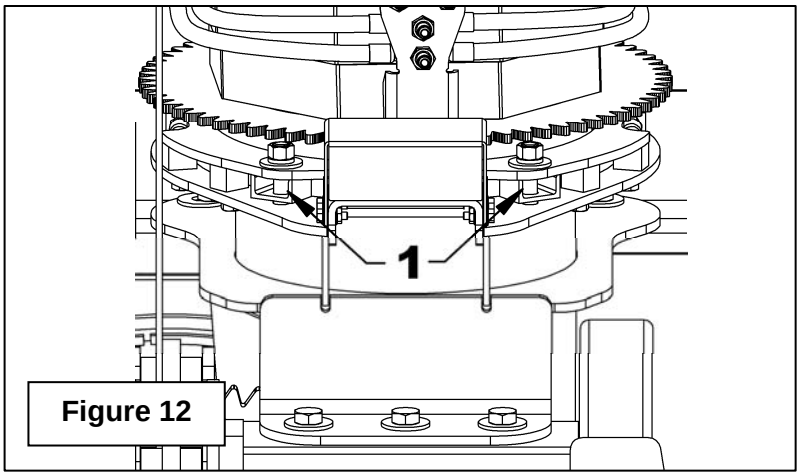

Figure 12

Connecting the Tractor Hoses

1. **Figure 13:** Use 90° 9/16"JIC swivel female elbows (items 1) (not supplied) to connect the tractor hoses to the four outlets on the base of the telescopic chute.
2. **Figure 13:** Remove the bolt (item 4) and nut holding the two hose clamps together. Place three of the hoses under the large clamp (item 2) and the fourth hose under the single clamp (item 3). Secure the hoses with the bolt and the nylon insert nut.

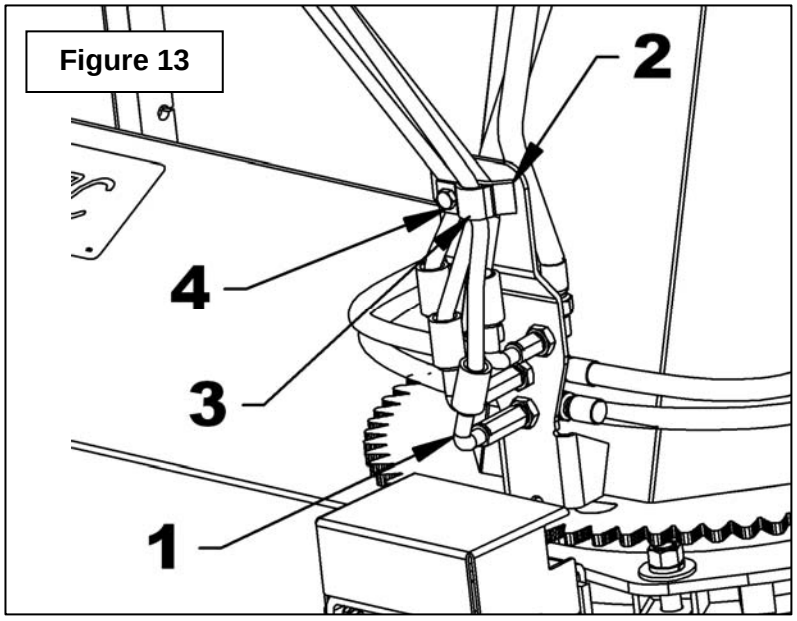

Figure 13

MAINTENANCE

⚠ WARNING

For safety reasons, make sure the motor and all equipment components are completely stopped and that the drive mechanism is disengaged BEFORE making any type of adjustment.

Lubrication (figure 14)

As illustrated, grease the sliders of the telescopic chute base with "SHELL SRS2000 MOLY" grease or the equivalent so it slides better.

Clogged Chute (figure 14)

(If required, consult the part section of the telescopic chute base for more details).

1. Extend the chute to its maximum.
2. Take off the bottom door (item 1) by removing the knobs (items 2) and pulling the door down.
3. Open the upper door (item 3) by pulling and unhooking the latches (items 4).
4. Using a shovel, completely remove the snow from inside the chute before reinstalling the doors and activating the chute.

NOTE: To prevent the chute from clogging up when the snow is wet, it's recommended to remove the lower door (item 1).

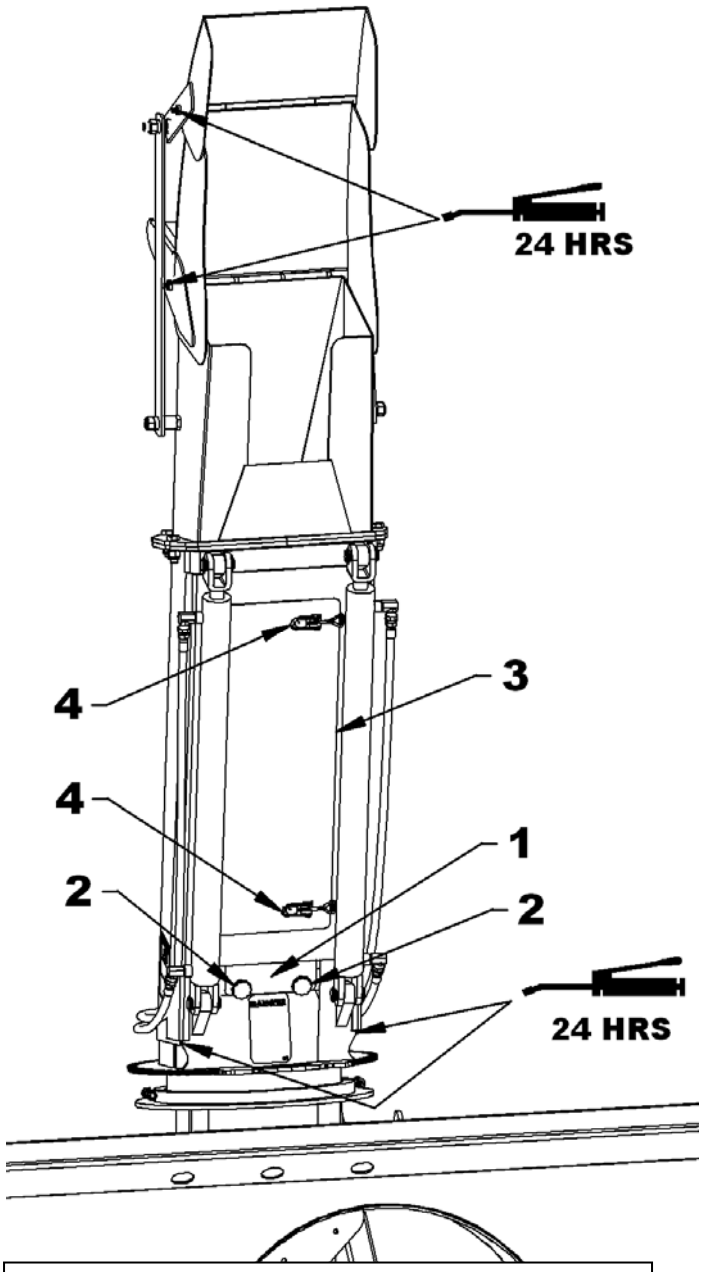

Figure 14
View of the chute when it's not stretched to its maximum

3 PART CHUTE

REF.	DESCRIPTION	QTY	PART #
1	Upper deflector	1	669361
2	Hinge pin	2	669362
3	Flat bar	2	669363
4	Chute base	1	669435
5	Middle deflector	1	669436
6	Stover nut 3/4" NC, PQE	4	O/L
7	Flat washer 10mm (10.5mm int. diam.), PTD	4	1400019
8	Grease fitting /8"NPT straight	4	656493
9	Hex. bolt 5/8" NC X 2" gr.5 PTD	6	O/L
10	Lockwasher 5/8" PTD	6	O/L
11	Nylon insert nut 5/8" NC, PTD	6	O/L

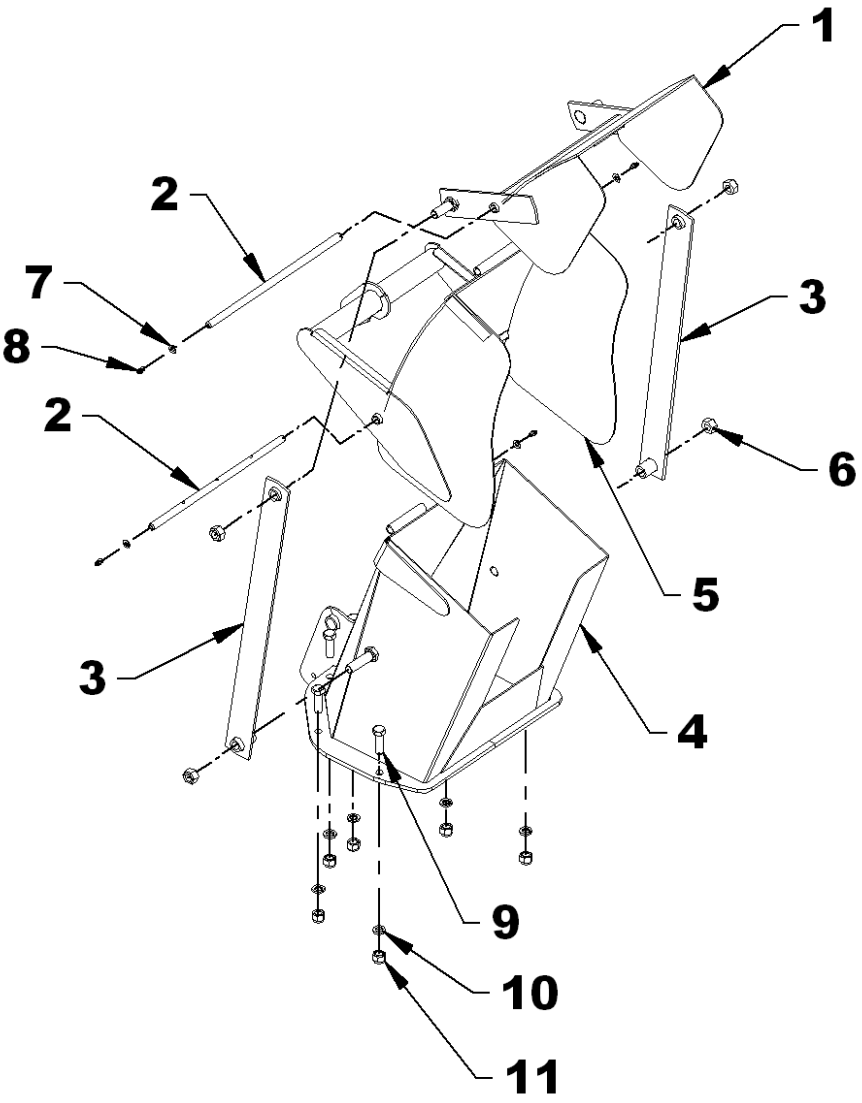

TELESCOPIC CHUTE BASE

REF.	DESCRIPTION	QTY	PART #
1	Telescopic chute base	1	669257
2	Door	1	669437
3	Flange kit	1	669258
4	Knob 5/16"NC	2	661832
5	Hex. bolt 1/2"NC X 1 1/2"lg gr.5 PTD	10	O/L
6	Flat washer 1/2" (9/16" int. diam.), PTD	10	O/L
7	Lockwasher 1/2" PTD	10	O/L

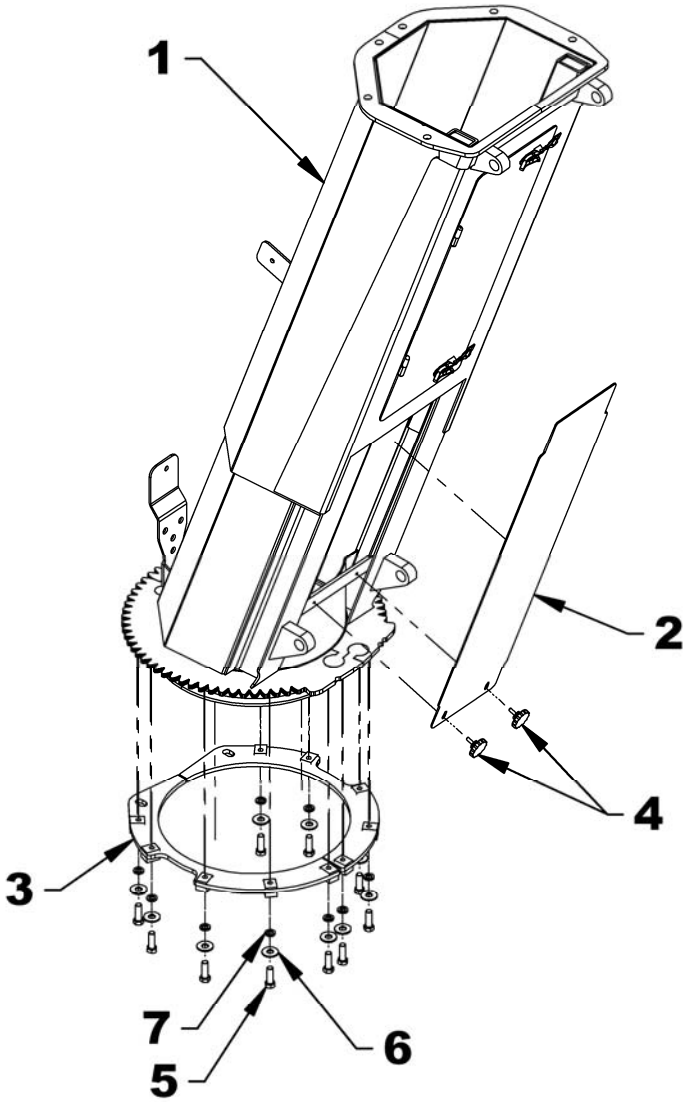

HYDRAULIC COMPONENTS

REF.	DESCRIPTION	QTY	PART #
1	Cylinder 2" x 32"	2	3900469
	- Seal kit	1	3900205
2	Cylinder 2" x 8"	1	3900022
	- Seal kit	1	3900205
3	Hose 3/8" x 28" lg	2	3700176
4	Hose 3/8" x 61" lg	2	3700177
5	Hose 3/8" x 86" lg	1	3700178
6	Hose 3/8" x 98" lg	1	3700179
7	Flow restrictor 0.063" 90°	4	3900204
8	Elbow 90°, 3/8"NPT RM x 3/8"NPT SWF	2	654557
9	Fitting "T" 9/16"JIC RM, bulkhead	2	2600214
10	Elbow 90°, 9/6"JIC M, bulkhead	2	2600215
11	Bulkhead nut 9/6"JIC	4	2600073
12	Hose clamp - double	2	666583
13	Hose clamp - large	1	668205
14	Hose clamp - single	1	668307
15	Hex. bolt 3/8"NC X 1 1/2"lg gr.5 PTD	2	O/L
16	Hex. bolt 3/8"NC X 2"lg gr.5 PTD	1	O/L
17	Nylon insert hex. nut 3/8" NC, PTD	3	O/L
18	Plastic guard for hoses 24"lg, black	2	669153
19	Plastic guard for hoses 40"lg, black	1	669094

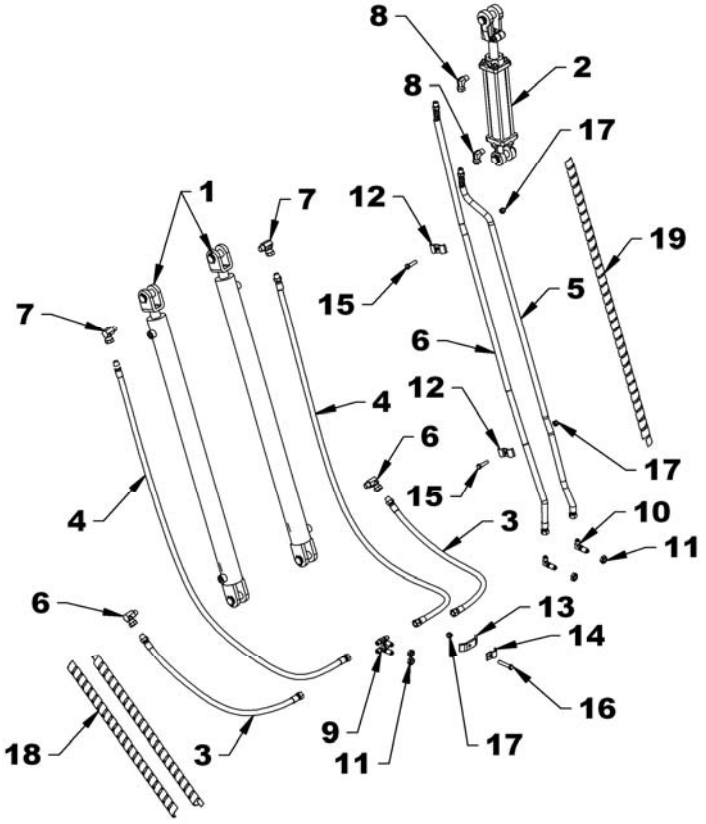

DECALS
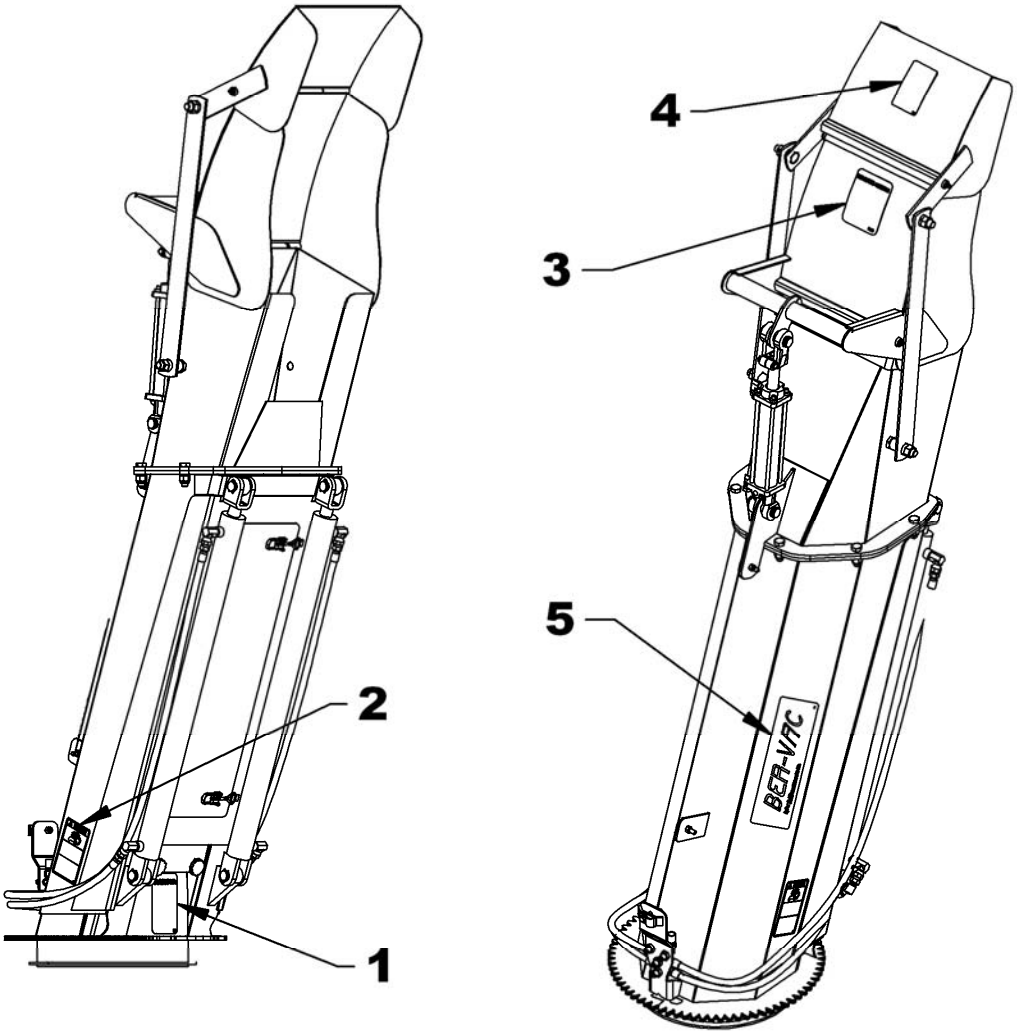
REF.	DESCRIPTION	QTY	PART #
1	Decel #086 "Danger" fan	1	656779
2	Decel #384 "Danger" gear	2	2500330
3	Decel #230 "Mise en garde"	1	660989
4	Decel #229 "Warning"	1	660988
5	Decal #372 "Ber-Vac"	1	2500316